D45S-7, D50SC-7

Mast type	Maximum Fork Height	Maximum Lowered Height	Fully Extended Height	Free Lift	Rated Load Capacities							
					D45S-7, D50SC-7							
			With Load Backrest	With Load Backrest	Tilt Angle				Load Capacities			
					Single Pneumatics		Double Pneumatics		Single Pneumatics		Double Pneumatics	
					FWD	BWD	FWD	BWD	LC 500mm	LC600mm	LC500mm	LC600mm
	mm	mm	mm	mm	deg	deg	deg	deg	kg	kg	kg	kg
STD	3,000	2,230	4,420	160	8	10	8	10	5,000	4,570	5,000	4,570
	3,300	2,380	4,720	160	8	10	8	10	5,000	4,570	5,000	4,570
	3,650	2,555	5,070	160	8	10	8	10	5,000	4,570	5,000	4,570
	4,000	2,880	5,420	160	8	10	8	10	5,000	4,570	5,000	4,570
	4,250	3,005	5,670	160	8	10	8	10	5,000	4,570	5,000	4,570
	4,850	3,455	6,270	160	8	5	8	10	4,900	4,480	4,950	4,525
FF	3,000	2,210	4,400	860	8	10	8	10	5,000	4,575	5,000	4,575
FFT	4,000	2,090	5,415	740	8	8	8	8	5,000	4,585	5,000	4,585
	4,250	2,180	5,680	830	8	8	8	8	4,975	4,565	5,000	4,585
	4,700	2,330	6,130	980	8	8	8	8	4,800	4,400	4,850	4,450
	5,150	2,480	6,580	1,130	8	3	8	8	4,650	4,265	4,700	4,310
	5,600	2,630	7,030	1,280	8	3	8	5	4,500	4,125	4,550	4,175
	6,050	2,780	7,480	1,430	8	3	8	3	3,575	3,280	4,025	3,690

D50C-7, D55SC-7

Mast type	Maximum Fork Height	Maximum Lowered Height	Fully Extended Height	Free Lift	Rated Load Capacities							
					D50C-7, D55SC-7							
			With Load Backrest	With Load Backrest	Tilt Angle				Load Capacities			
					Single Pneumatics		Double Pneumatics		Single Pneumatics		Double Pneumatics	
					FWD	BWD	FWD	BWD	LC 500mm	LC600mm	LC500mm	LC600mm
	mm	mm	mm	mm	deg	deg	deg	deg	kg	kg	kg	kg
STD	2,750	2,230	4,170	170	8	10	8	10	5,500	5,030	5,500	5,030
	3,050	2,380	4,470	170	8	10	8	10	5,500	5,030	5,500	5,030
	3,400	2,555	4,820	170	8	10	8	10	5,500	5,030	5,500	5,030
	3,750	2,880	5,170	170	8	10	8	10	5,500	5,030	5,500	5,030
	4,000	3,005	5,420	170	8	10	8	10	5,500	5,030	5,500	5,030
	4,600	3,455	6,020	170	8	8	8	10	5,500	5,030	5,500	5,030
FF	2,875	2,210	4,275	870	8	10	8	10	5,500	5,035	5,500	5,035
FFT	3,875	2,090	5,290	750	8	8	8	8	5,500	5,050	5,500	5,050
	4,125	2,180	5,555	840	8	8	8	8	5,500	5,050	5,500	5,050
	4,575	2,330	6,005	990	8	8	8	8	5,375	4,935	5,425	4,980
	5,025	2,480	6,455	1,140	8	5	8	8	5,200	4,775	5,150	4,725
	5,475	2,630	6,905	1,290	8	3	8	5	4,650	4,270	4,750	4,360
	5,925	2,780	7,355	1,440	8	3	8	5	3,625	3,330	3,525	3,235

D55C-7

Mast type	Maximum Fork Height	Maximum Lowered Height	Fully Extended Height	Free Lift	Rated Load Capacities					
					D55C-7					
			With Load Backrest	With Load Backrest	Tilt Angle				Load Capacities	
					Single Pneumatics		Double Pneumatics		Single Pneumatics	Double Pneumatics
					FWD	BWD	FWD	BWD	LC 600mm	LC 600mm
	mm	mm	mm	mm	deg	deg	deg	deg	kg	kg
STD	2,750	2,230	4,170	170	8	10	8	10	5,500	5,500
	3,050	2,380	4,470	170	8	10	8	10	5,500	5,500
	3,400	2,555	4,820	170	8	10	8	10	5,500	5,500
	3,750	2,880	5,170	170	8	10	8	10	5,500	5,500
	4,000	3,005	5,420	170	8	10	8	10	5,500	5,500
	4,600	3,455	6,020	170	8	8	8	10	5,400	4,900
FF	2,875	2,210	4,275	870	8	10	8	10	5,500	5,500
FFT	3,875	2,090	5,290	750	8	8	8	8	5,500	5,500
	4,125	2,180	5,555	840	8	8	8	8	5,500	5,500
	4,575	2,330	6,005	990	8	8	8	8	5,500	5,500
	5,025	2,480	6,455	1,140	8	5	8	8	5,150	4,925
	5,475	2,630	6,905	1,290	8	3	8	5	4,500	4,575
	5,925	2,780	7,355	1,440	8	3	8	5	3,500	3,375

Note : Mast Specifications & Rated Capacities are based on standard chassis with pneumatic tire and without side shifter.

Production Subsidiary
Sales Subsidiary
Parts Depot Center

Doosan Industrial Vehicle Europe nv
Europark-Noord 36A
9100 Sint-Niklaas
Belgium

Tel.: +32 3 760 09 87
Fax: +32 3 760 09 89
Website : www.doosan-iv.eu

EUD45S7-180724ENv3 (July 2018)

Authorized Dealer

D35S-7 / D40S-7 / D45S-7 / D50C-7 / D55C-7
D40SC-7 / D45SC-7 / D50SC-7 / D55SC-7

7 SERIES FORKLIFTS

Pneumatic Diesel 3.5 to 5.5 ton capacity
Euro Stage IIIB / Euro Stage IV

GENERAL SPECIFICATIONS

Characteristics	1.1	Manufacturer			Doosan		Doosan		Doosan		Doosan		Doosan		Doosan		Doosan		Doosan		Doosan	
	1.2	Model			D35S-7		D40S-7		D45S-7		D50C-7		D55C-7		D40SC-7		D45SC-7		D50SC-7		D55SC-7	
	1.3	Drive			Diesel		Diesel		Diesel		Diesel		Diesel		Diesel		Diesel		Diesel		Diesel	
	1.4	Operator type			Seated		Seated		Seated		Seated		Seated		Seated		Seated		Seated		Seated	
	1.5	Load Capacity	Q	kg	3,500		4,000		4,500		5,000		5,500		4,000		4,500		5,000		5,500	
	1.6	Load Center	c	mm	600		600		600		600		600		500		500		500		500	
	1.8	Load Distance: Center of Driveaxle to fork	x	mm	560		560		560		570		570		560		560		560		570	
	1.9	Wheelbase	y	mm	2,015		2,015		2,115		2,115		2,115		2,015		2,015		2,115		2,115	
Weight	2.1	Service weight		kg	6,040	6,110	6,400		6,880	6,845	7,325	7,395	7,725	7,795	6,040	6,110	6,400		6,880	6,845	7,325	7,395
	2.2	Axle Loading. loaded. front/rear		kg	8,340/1,200	8,405/1,205	9,105/1,295	9,095/1,305	10,000/1,380	9,975/1,370	10,850/1,475	10,910/1,485	11,640/1,585	11,705/1,590	8,340/1,200	8,405/1,205	9,105/1,295	9,095/1,305	10,000/1,380	9,975/1,370	10,850/1,475	10,910/1,485
	2.3	Axle Loading, unloaded. front/rear		kg	2,700/3,340	2,730/3,380	2,670/3,730	2,625/3,775	2,890/3,990	2,840/4,005	3,070/4,255	3,095/4,290	3,235/4,490	3,265/4,530	2,700/3,340	2,730/3,380	2,670/3,730	2,625/3,775	2,890/3,990	2,840/4,005	3,070/4,255	3,095/4,290
Tyres	3.1	Tyres: pneumatic (P), cushion (C)		-	P		P		P		P		P		P		P		P		P	
	3.2	Tyre size, Front		-	8.25x15-14PR/ 7.50x16-12PR		300x15-18PR/ 7.50x16-12PR		300x15-18PR/ 7.50x16-12PR		300x15-18PR/ 7.50x16-12PR		300x15-18PR/ 7.50x16-12PR		8.25x15-14PR/ 7.50x16-12PR		300x15-18PR/ 7.50x16-12PR		300x15-18PR/ 7.50x16-12PR		300x15-18PR/ 7.50x16-12PR	
	3.3	Tyre size, Rear		-	7.00x12-12PR		7.00x12-12PR		7.00x12-12PR		7.00x12-14PR		7.00x12-14PR		7.00x12-12PR		7.00x12-12PR		7.00x12-12PR		7.00x12-14PR	
	3.5	Wheels, number Front/Rear (x = driven wheels)		-	2x/2		2x/2		2x/2		2x/2		2x/2		2x/2		2x/2		2x/2		2x/2	
	3.6	Tread, Front	b10	mm	1,140 / 1,290		1,155 / 1,290		1,155 / 1290		1,155 / 1,290		1,155 / 1,290		1,140 / 1,290		1,155 / 1,290		1,155 / 1,290		1,155 / 1,290	
	3.7	Tread, Rear	b11	mm	1,115		1,115		1,115		1,115		1,115		1,115		1,115		1,115		1,115	
Dimensions	4.1	Tilt of Mast/Fork carriage Forward/Backward	α/β	°	8/10		8/10		8/10		8/10		8/10		8/10		8/10		8/10		8/10	
	4.2	Height, Mast lowered	h1	mm	2,225		2,230		2,230		2,380		2,380		2,225		2,230		2,230		2,380	
	4.3	Free Lift	h2	mm	160		160		160		170		170		160		160		160		170	
	4.4	Lift height	h3	mm	3,000		3,000		3,000		3,050		3,050		3,000		3,000		3,000		3,050	
	4.5	Height, Mast Extended	h4	mm	4,265		4,270		4,420		4,470		4,470		4,265		4,270		4,420		4,470	
	4.7	Height of Overhead Guard (Cabin)	h6	mm	2,225		2,230		2,230		2,230		2,230		2,225		2,230		2,230		2,230	
	4.8	Height of Seat	h7	mm	1,248		1,255		1,255		1,255		1,255		1,248		1,255		1,255		1,255	
	4.19	Overall Length	l1	mm	4,315		4,365		4,480		4,525		4,550		4,315		4,365		4,480		4,525	
	4.20	Length to Forkface	l2	mm	3,115		3,165		3,280		3,325		3,350		3,115		3,165		3,280		3,325	
	4.21	Overall Width	b1	mm	1,370		1,455		1,455		1,455		1,455		1,370		1,455		1,455		1,455	
	4.22	Fork Dimensions	s/e/l	mm	50x150x1,200		50x150x1,200		50x150x1,200		60x150x1,200		60x150x1,200		50x150x1,200		50x150x1,200		50x150x1,200		60x150x1,200	
	4.23	Fork carriage ISO 2328, class/type A,B		-	III		III		IV		IV		IV		III		III		IV		IV	
	4.24	Fork carriage width	b3	mm	1,250		1,250		1,330		1,330		1,330		1,250		1,250		1,330		1,330	
	4.31	Ground Clearance, loaded, below mast	m1	mm	150		160		160		160		160		150		160		160		160	
	4.32	Ground Clearance, center of wheelbase	m2	mm	205		205		205		205		205		205		205		205		205	
	4.34.1	Aisle width for pallets 1,000 x 1,200 crossways	Ast	mm	4,542		4,592		4,637		4,695		4,745		4,542		4,592		4,637		4,695	
	4.34.2	Aisle width for pallets 800 x 1,200 crossways	Ast	mm	4,742		4,792		4,837		4,895		4,945		4,742		4,792		4,837		4,895	
	4.35	External Turning Radius	Wa	mm	2,782		2,832		2,877		2,925		2,975		2,782		2,832		2,877		2,925	
	4.36	Internal Turning Radius	b13	mm	1,007		1,007		1,070		1,070		1,070		1,007		1,007		1,070		1,070	
Performance data	5.1	Travel Speed, Loaded/unloaded		km/h	25.0/27.0		25.0/27.0		25.0/27.0		25.0/27.0		25.0/27.0		25.0/27.0		25.0/27.0		25.0/27.0		25.0/27.0	
	5.2	Lift Speed, Loaded/unloaded		m/s	0.56/0.60	0.58/0.63	0.55/0.60	0.57/0.63	0.54/0.60	0.56/0.60	0.53/0.60	0.55/0.60	0.52/0.60	0.54/0.60	0.56/0.60	0.58/0.63	0.55/0.60	0.57/0.63	0.54/0.60	0.56/0.60	0.53/0.60	0.55/0.60
	5.3	Lowering Speed, Loaded/unloaded		m/s	0.45/0.50		0.45/0.50		0.45/0.50		0.45/0.50		0.45/0.50		0.45/0.50		0.45/0.50		0.45/0.50		0.45/0.50	
	5.5	Drawbar pull, Loaded (@ 1.6km/h)		N	34,730	36,830	34,200	36,360	34,220	36,310	34,050	36,150	33,830	35,930	34,730	36,830	34,200	36,360	34,220	36,310	34,050	36,150
	5.6	Max. Drawbar pull, Loaded		N	38,430	41,200	37,810	40,670	37,900	40,660	37,740	40,500	37,520	40,290	38,430	41,200	37,810	40,670	37,900	40,660	37,740	40,500
	5.7	Gradeability, Loaded/unloaded (@ 1.6km/h)		%	39.7/71.2	42.5/77.8	35.6/66.7	38.2/72.7	32.3/60.7	34.5/65.8	29.2/54.6	31.2/59.0	26.9/50.9	28.7/54.8	39.7/71.2	42.5/77.8	35.6/66.7	38.2/72.7	32.3/60.7	34.5/65.8	29.2/54.6	31.2/59.0
	5.8	Max. Gradeability, Loaded/unloaded		%	44.7/82.9	48.6/93.6	39.9/77.3	43.5/86.7	36.2/69.2	39.3/77.4	32.7/62.3	35.4/68.7	30.1/57.8	32.5/63.5	44.7/82.9	48.6/93.6	39.9/77.3	43.5/86.7	36.2/69.2	39.3/77.4	32.7/62.3	35.4/68.7
	5.10	Service Brake		-	Foot/Hyd		Foot/Hyd		Foot/Hyd		Foot/Hyd		Foot/Hyd		Foot/Hyd		Foot/Hyd		Foot/Hyd		Foot/Hyd	
Combustion Engine	7.1	Engine Manufacturer/type		-	D34NAP	D34P	D34NAP	D34P	D34NAP	D34P	D34NAP	D34P	D34NAP	D34P	D34NAP	D34P	D34NAP	D34P	D34NAP	D34P	D34NAP	D34P
	7.2	Engine power according to DIN ISO1585		kW	55	73.6	55	73.6	55	73.6	55	73.6	55	73.6	55	73.6	55	73.6	55	73.6	55	73.6
	7.3	Rated Speed		min-1	2,400		2,400		2,400		2,400		2,400		2,400		2,400		2,400		2,300	
	7.3.1	Torque at 1/min		N•m	330	335	330	335	330	335	330	335	330	335	330	335	330	335	330	335	330	335
	7.4	Number of Cylinders/Displacement	cc	-/cm3	4/3,409		4/3,409		4/3,409		4/3,409		4/3,409		4/3,409		4/3,409		4/3,409		4/3,409	
	7.10	Battery Voltage/normal capacity		V/Ah	12/100		12/100		12/100		12/100		12/100		12/100		12/100		12/100		12/100	
Add. Data	10.1	Operating pressure for attachments		bar	160		160		160		160		160		160		160		160		160	
	10.2	Oil volume for attachments		l/min	80		80		80		80		80		80		80		80		80	
	10.4	Fuel Tank Capacity		l	118		118		131		131		131		118		118		131		131	

Note : Specification values quoted in this specification sheet have been rounded. Performance may vary due to operation conditions.
Products and specifications are subject to improvement and change without prior notices.

DIMENSIONAL DRAWING

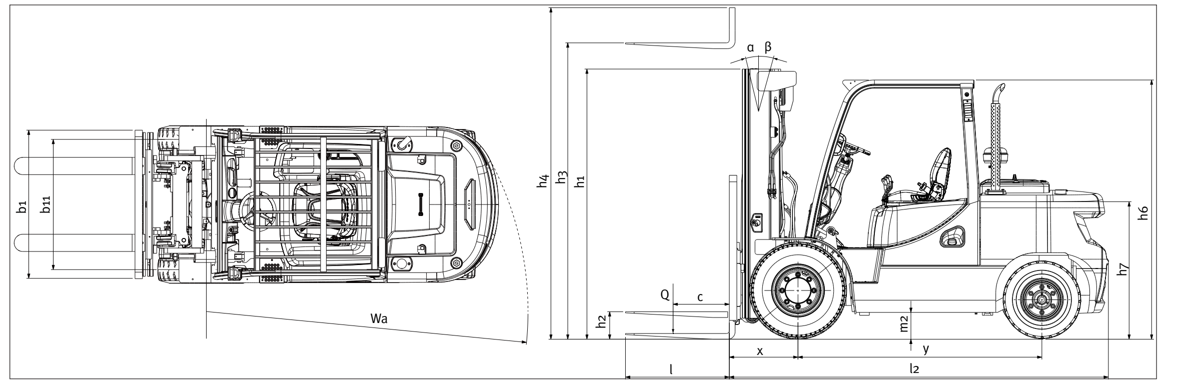

MAST SPECIFICATIONS and RATED CAPACITIES

D35S-7, D40SC-7

Mast type	Maximum Fork Height	Maximum Lowered Height	Fully Extended Height	Free Lift	Rated Load Capacities D35S-7, D40SC-7							
			With Load Backrest	With Load Backrest	Tilt Angle				Load Capacities			
					Single Pneu.		Double Pneu.		Single Pneumatics		Double Pneumatics	
					FWD	BWD	FWD	BWD	LC 500mm	LC600mm	LC500mm	LC600mm
	mm	mm	mm	mm	deg	deg	deg	deg	kg	kg	kg	kg
STD	3,000	2,225	4,265	160	8	10	8	10	4,000	3,655	4,000	3,655
	3,300	2,375	4,565	160	8	10	8	10	4,000	3,655	4,000	3,655
	3,650	2,550	4,915	160	8	10	8	10	4,000	3,655	4,000	3,655
	4,000	2,875	5,265	160	8	10	8	10	4,000	3,655	4,000	3,655
	4,250	3,000	5,515	160	8	10	8	10	4,000	3,655	4,000	3,655
	4,850	3,450	6,115	160	8	8	8	10	3,850	3,520	3,875	3,545
FF	3,000	2,205	4,250	1,005	8	10	8	10	4,000	3,660	4,000	3,660
FFT	4,000	2,090	5,265	890	8	8	8	8	3,975	3,645	4,000	3,670
	4,250	2,175	5,530	975	8	8	8	8	3,900	3,575	3,950	3,625
	4,700	2,325	5,980	1,125	8	8	8	8	3,775	3,465	3,800	3,485
	5,150	2,475	6,430	1,275	8	5	8	8	3,650	3,350	3,675	3,370
	5,600	2,625	6,880	1,425	8	3	8	8	3,525	3,235	3,550	3,255
	6,050	2,775	7,330	1,575	8	3	8	5	3,075	2,820	3,450	3,165

D40S-7, D45SC-7

Mast type	Maximum Fork Height	Maximum Lowered Height	Fully Extended Height	Free Lift	Rated Load Capacities D40S-7, D45SC-7							
			With Load Backrest	With Load Backrest	Tilt Angle				Load Capacities			
					Single Pneu.		Double Pneu		Single Pneumatics		Double Pneumatics	
					FWD	BWD	FWD	BWD	LC 500mm	LC600mm	LC500mm	LC600mm
	mm	mm	mm	mm	deg	deg	deg	deg	kg	kg	kg	kg
STD	3,000	2,230	4,270	160	8	10	8	10	4,500	4,115	4,500	4,115
	3,300	2,380	4,570	160	8	10	8	10	4,500	4,115	4,500	4,115
	3,650	2,555	4,920	160	8	10	8	10	4,500	4,115	4,500	4,115
	4,000	2,880	5,270	160	8	10	8	10	4,500	4,115	4,500	4,115
	4,250	3,005	5,520	160	8	10	8	10	4,500	4,115	4,500	4,115
	4,850	3,455	6,120	160	8	8	8	10	4,400	4,025	4,425	4,045
FF	3,000	2,210	4,255	1,010	8	10	8	10	4,500	4,115	4,500	4,115
FFT	4,000	2,090	5,270	890	8	8	8	8	4,500	4,125	4,500	4,125
	4,250	2,180	5,535	980	8	8	8	8	4,475	4,105	4,500	4,125
	4,700	2,330	5,985	1,130	8	8	8	8	4,325	3,965	4,350	3,990
	5,150	2,480	6,435	1,280	8	5	8	8	4,175	3,830	4,225	3,875
	5,600	2,630	6,885	1,430	8	3	8	5	4,050	3,715	4,075	3,740
	6,050	2,780	7,335	1,580	8	3	8	3	3,800	3,485	3,950	3,625

Note : Mast Specifications & Rated Capacities are based on standard chassis with pneumatic tire and without side shifter.